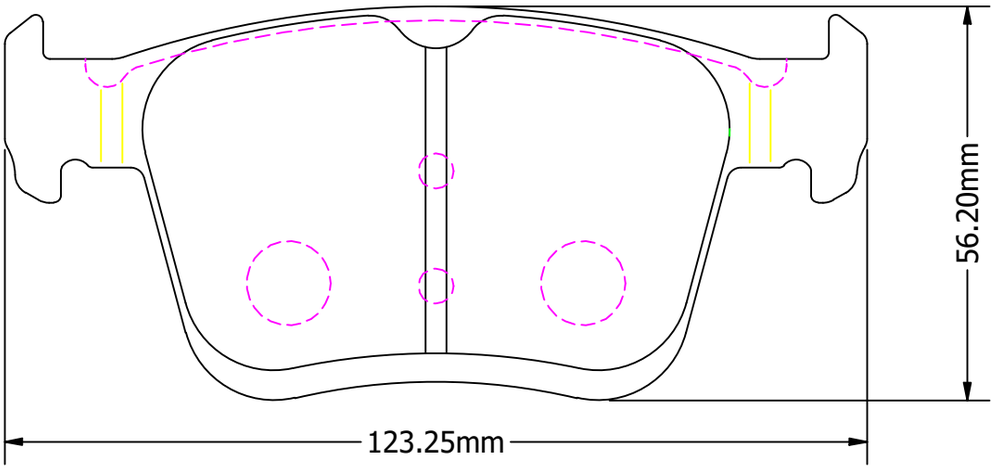

Thickness = 16.6mm

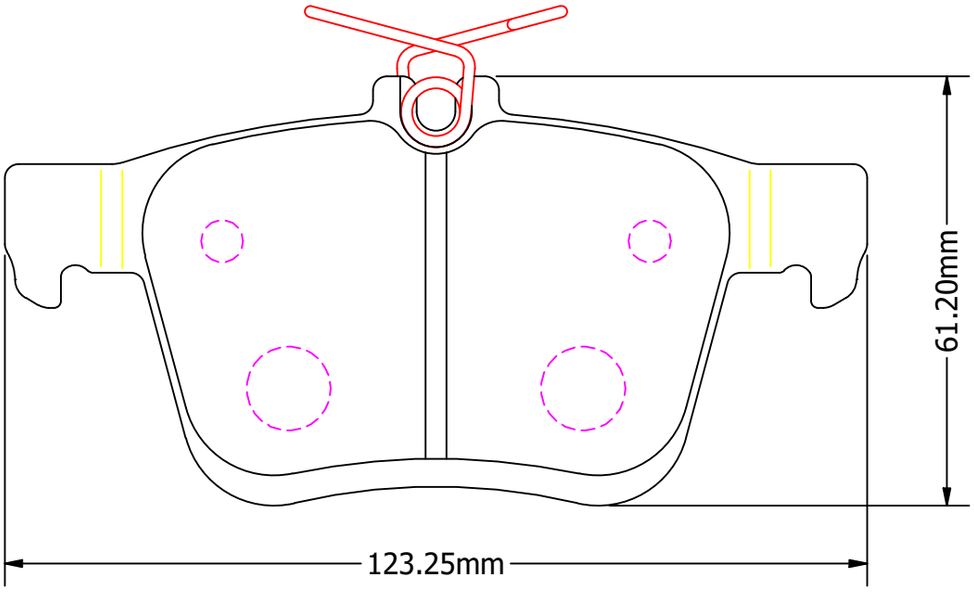

Thickness = 16.6mm